NAVIGATOR™

Portable Balances

Multi-Purpose Portable Balances Suitable for Everyday Weighing

OHAUS raises the bar in price-performance ratio with the newly-designed Navigator series which is perfect for general weighing applications in laboratory, industrial and education settings. Ruggedly constructed and multifunctional, the Navigator is a powerful balance that can handle a diverse range of weighing applications with features such as fast stabilization time, overload protection at four times its rated capacity, and easy operation.

Unique Features:

- Navigator offers essential weighing applications at a competitive price point.
- Advanced weighing technology offers one-second stabilization for fast and accurate weighing results, improving operator efficiency, productivity and throughput.
- Overload protection system that can withstand loads up to four times the rated capacity safeguards the balance.

NAVIGATOR™ *Portable Balances*

Model	NV123	NV223	NV323	NV222	NV422	NV622	NV1202	NV2202	NV3202	NV221	NV621	NV1201	NV2201
Capacity (g)	120	220	320	220	420	620	1200	2200	3200	220	620	1200	2200
Readability (g)	0.001			0.01						0.1			
Repeatability (std. Dev.)	0.004			0.01	0.02		0.045			0.1			
Linearity (g)	0.009			0.02			0.06			0.2			
Span Calibration Mass*	100	200	300	200		300	1000	2000	3000	200	300	500	1000
Linearity Calibration Mass	50, 100 g	100, 200 g	150, 300 g	100, 200 g	200, 400 g	300, 600 g	500 g, 1 kg	1 kg, 2 kg	1.5 kg, 3 kg	100, 200 g	300, 600 g	500 g, 1 kg	1 kg, 2 kg
Stabilization Time(s)	2.5			1	1.5		2			1			
Construction	ABS housing and stainless steel pan												
Draftshield	Removable Draftshield			n/a									
Calibration	User-selectable external span or linearity calibration / Digital with external weight												
Tare Range	Full capacity by subtraction												
Weighing Units	g, kg, N, oz, ozt, dwt, lb, lb:oz, ct, grain												
Application Modes	Weighing, Parts Counting, Percent Weighing, Checkweighing												
Power Requirement	AC adapter (included) or 4 C batteries (not included)												
Typical Battery Life	200 hours			270 hours			200 hours			270 hours			
Temperature Range	10 °C (50 °F) to 40 °C (104 °F) at 10% to 85% relative humidity, non-condensing												
Storage Conditions	-20 °C (-4 °F) to 55 °C (131 °F) at 10% to 90% relative humidity, non-condensing												
Communication	RS232, USB, or Ethernet (available as accessories)												
Display Type	Liquid Crystal Display (LCD) with backlight												
Display Size	0.78 in. / 20 mm digits												
Draftshield Dimensions	Ø4.7 in / Ø120 mm, height: 1.7 in / 42 mm			n/a									
Pan Size (W × D)	Ø3.7 in / Ø93 mm			Ø 5.7 in. / 145 mm			7.5 x 5.7 in / 190 x 144 mm						
Balance Dimensions (W × D × H)	8 x 9.1 x 4.2 in / 204 x 230 x 107 mm with draft shield 8 x 9.1 x 2.9 in / 204 x 230 x 74 mm without draft shield			8 × 9.1 × 2.8 in. / 204 × 230 × 70 mm									
Shipping Dimensions (W × D × H)	15.2 x 13.2 x 6.7 in / 385 x 335 x 170 mm			11.8 x 9.8 x 5.3 in / 300 x 250 x 134 mm									
Net Weight	2.2 lb / 1.0 kg												
Shipping Weight	3.3 lb / 1.5 kg												

*not included

Dimensional Drawings

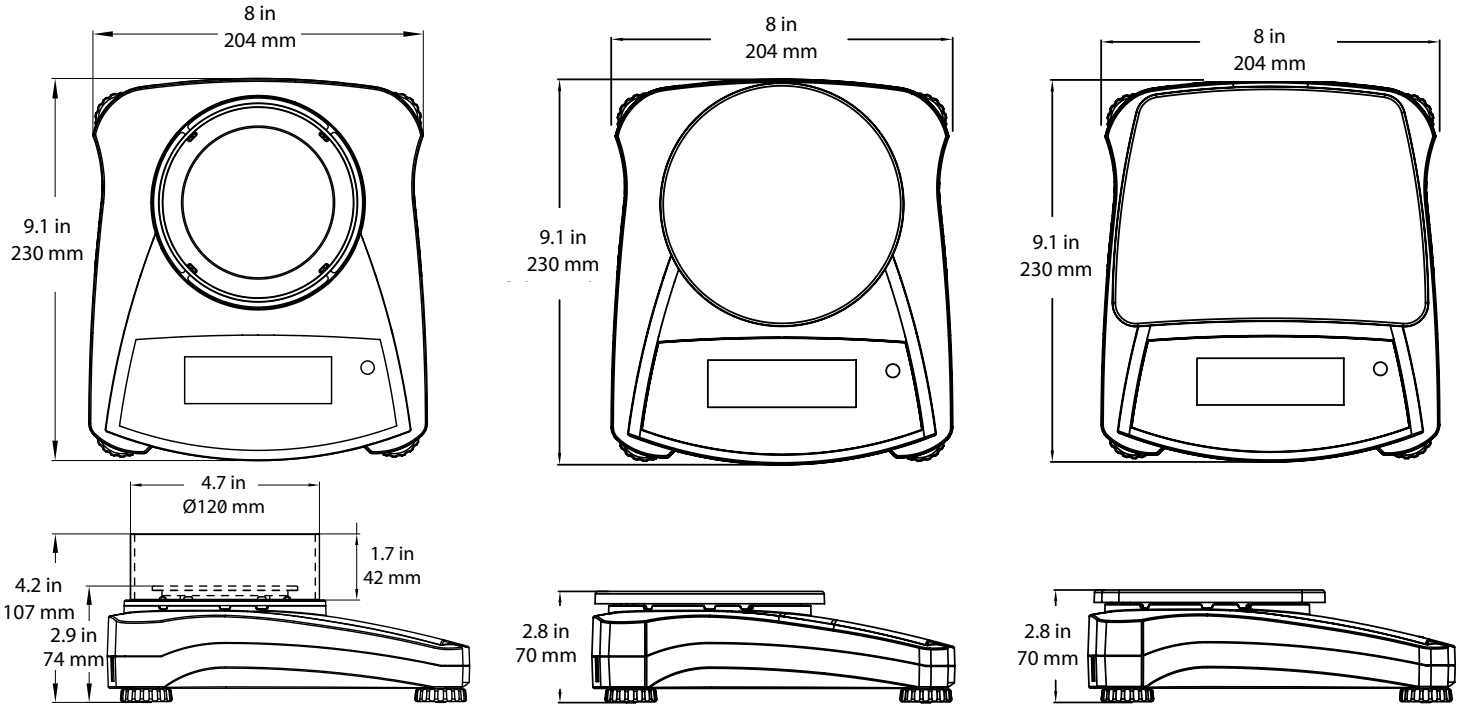

NAVIGATOR™ *Portable Balances*

Model	NVT2201	NVT4201	NVT6201	NVT10201	NVT2200	NVT6200	NVT12000	NVT22000
Capacity (g)	2200	4200	6200	10200	2200	6200	12000	22000
Readability (g)	0.1				1			
Repeatability (std Dev.)	0.1	0.2		0.25	1			
Linearity (g)	0.2			0.4	2			
Span Calibration Mass*	1000	2000	5000		1000	5000		10000
Linearity Calibration Mass	1 kg, 2 kg	2 kg, 4 kg	3 kg, 6 kg	5 kg, 10 kg	1 kg, 2 kg	3 kg, 6 kg	5 kg, 10 kg	10 kg, 20 kg
Stabilization Time(s)	1	1.5			1			
Construction	ABS housing and stainless steel pan							
Draftshield	n/a							
Calibration	User-selectable external span or linearity calibration/Digital with external weight							
Tare Range	Full capacity by subtraction							
Weighing Units	g, kg, N, oz, ozt, dwt, lb, lb:oz, ct, grain							
Application Modes	Weighing, Parts Counting, Percent Weighing, Checkweighing							
Power Requirement	AC adapter (included) or 4 C batteries (not included)							
Typical Battery Life	270 hours			200 hours	270 hours			
Temperature Range	10°C (50°F) to 40°C (104°F) at 10% to 85% relative humidity, non-condensing							
Storage Conditions	-20°C (-4°F) to 55°C (131°F) at 10% to 90% relative humidity, non-condensing							
Communication	RS232, USB, or Ethernet (available as accessories)							
Display Type	Liquid Crystal Display (LCD) with backlight							
Display Size	0.78 in / 20 mm digits							
Draftshield Dimensions	n/a							
Pan Size (W × D)	9.1 x 6.9 in / 230 x 174 mm							
Balance Dimensions (W × D × H)	9.5 × 9.8 × 2.9 in. / 240 × 250 × 74 mm							
Shipping Dimensions (W × D × H)	15.2 × 13.2 × 6.7 in. / 385 × 335 × 170 mm							
Net Weight	3.3 lb / 1.5 kg							
Shipping Weight	5.1 lb / 2.3 kg							

*not included

Dimensional Drawings

NVT

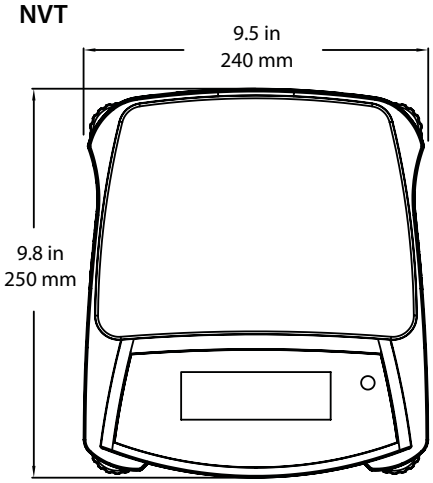

Built-in Application Modes

- **Weighing –** Determines the weight of items on the pan in the selected unit of measure
- **Parts Counting –** Counts the number of pieces on the pan using a uniform weight.
- **Percent Weighing –** Measures the weight of a sample displayed as a percentage of pre-established reference weight.
- **Check Weighing –** Compares the weight of sample against target limits.

NAVIGATOR™ *Portable Balances*

Fast Weighing Speed:
As Fast As 1second
Efficient Weighing

Draftshield is available accurate weighing with new-expanded models

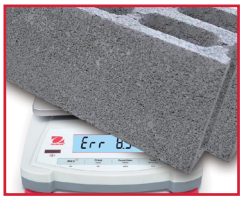

4 times Superior Overload Protection
Durable & Reliable

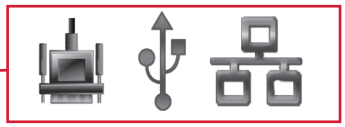

Multi-Connectivity Options
Easy for Data Logging

Touchless Sensor
Improve Productivity

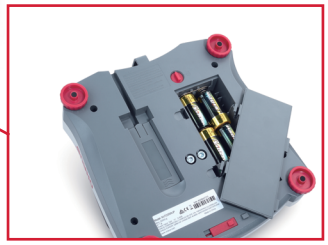

Up to 270 hours Battery Life
Uninterrupted operation

Large Pan & High Capacity
Weigh Big Items

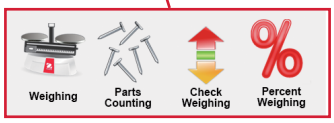

Multiple Application Modes

Other Standard Features and Equipment

ABS housing, stainless steel pan, transportation lock, menu and calibration lockswitch, slip-resistant and adjustable feet, leveling bubble, mechanical and software overload/underload protection, stability indicator, low battery indicator, auto shut-off, user-selectable print options, user-selectable communication settings

Accessories

RS232 Inferface 83032107
USB Interface 83032108
Ethernet Interface 83032109
Carrying Case 30467963
Adapter with Plugs 30467987
Printer, SF40A, AM 30064203
Weigh Below Kit, NV, NVT 30628012

Compliance

- **Product Safety:** IEC/EN 61010-1
- **Electromagnetic Compatibility:** IEC/EN 61326-1 Class B, Basic environments; FCC Part 15 Class B; Canada ICES-003 Class B
- **Compliance Marks:** CE; RCM

80775652_B 20260821 © Copyright OHAUS Corporation

OHAUS CORPORATION
Tel: 800.672.7722
973.377.9000
Fax: 973.944.7177
www.ohaus.com

The management system governing the manufacture of this product is ISO 9001:2015 certified.

OHAUS®